SIDE - 'S' (A)

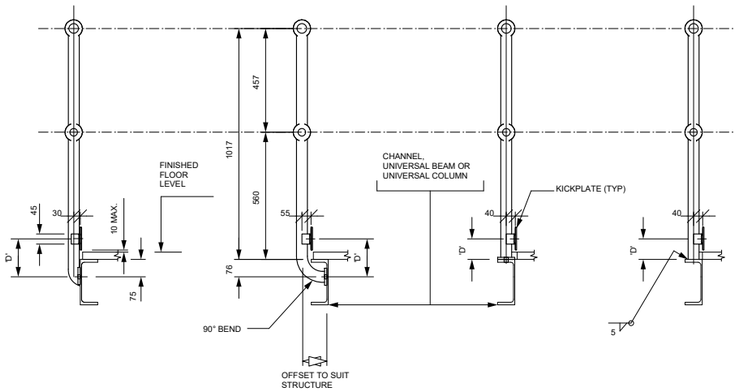

SIDE-OFFSET-'SO' (B) PLATFORM-'P' (C) WELDED-'W' (D)

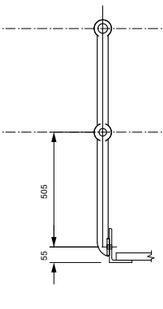

SIDE CONVEYOR -'SC' (E)

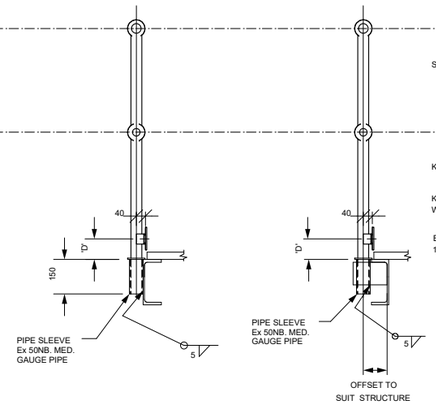

CORED-'C' (F) OFFSET CORED -'C' (G)

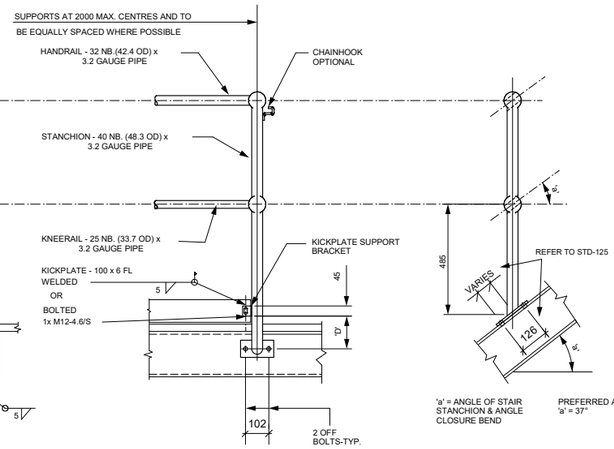

DRILLED ONE SIDE ONLY -'DOSO' (H)

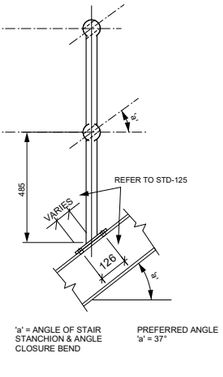

ANGLE MOUNTED - 'AM' (J)

NOTES

1. THIS DRAWING TO BE READ IN CONJUNCTION WITH GENERAL STRUCTURAL NOTES DRAWING.
2. THE DETAILS SHOWN ON THIS DRAWING ARE BASED ON REQUIREMENTS OUTLINED IN A.S.1657 (S.A.A. CODE FOR FIXED PLATFORMS,WALKWAYS,STAIRWAYS AND LADDERS) AND ARE MINIMUM ACCEPTABLE.
3. THE TYPE AND EXTENT OF HANDRAILS IS SHOWN ON THE DESIGN DRAWINGS.
4. CONTACT SURFACES OF HANDRAILS SHALL BE SMOOTH AND FREE FROM BURRS AND SHARP CORNERS.
5. ALL HANDRAILS ON THIS DRAWING ARE MONOWILLS HANDRAILING.
6. ALL HANDRAIL STANCHIONS AND RAILING TO BE HOT DIPPED GALVANISED U.O.N..
7. TYPE 'P' STANCHIONS ARE NOT RECOMMENDED WHERE CUT-OUTS IN THE FLOORING ARE REQUIRED FOR STANCHION INSTALLATION.
8. IF BENT PIPE IS NOT CONTINUOUS THROUGH STANCHION BALL USE SPLICE (DETAIL P) OR FULLLY WELD PIPE TO STANCHION.

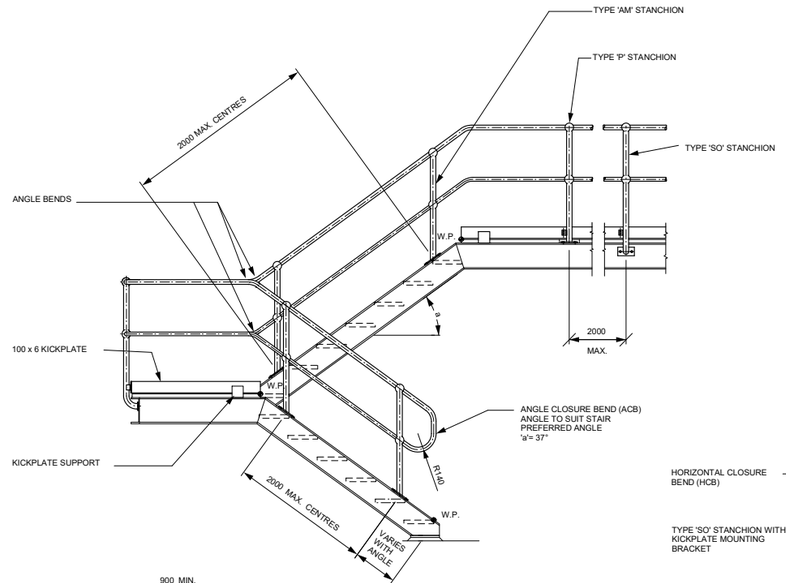

TYPICAL STAIR & PLATFORM HANDRAIL DETAILS

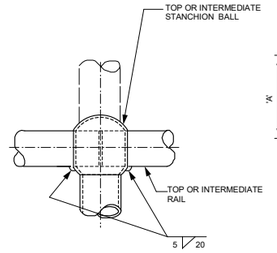

TYPICAL STANCHION/ HANDRAIL JOINT (K)

(STANDARD DETAIL FOR ON-SITE WELDING OF GALVANISED HANDRAIL)

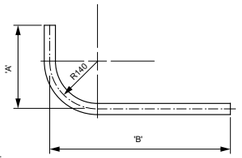

STANDARD 90° BEND:'A' & 'B' = 300
NON STD BEND : 'A' + 'B' = 6500 MAX.
'A' OR 'B' MINIMUM =200

STANCHION CENTRES REMAIN AT 2000 DESPITE BEND LENGTH.

TYPICAL 90° STD. & NON STD. BENDS (L)

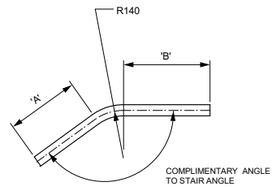

STANDARD ANGLE BEND: 'A' & 'B' = 300
NON STD. ANGLE BEND : 'A' + 'B' = 6500 MAX.
'A' OR 'B' MINIMUM = 200
STANCHION CENTRES REMAIN AT 2000 DESPITE BEND LENGTH.

TYPICAL STANDARD & NON STANDARD ANGLE BENDS (M)

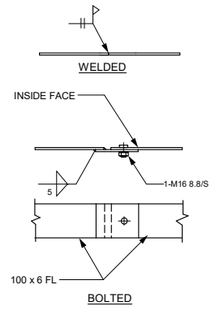

TYPICAL KICKPLATE SPLICE (N)

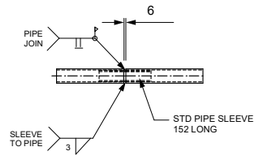

TYPICAL HANDRAIL SPLICE (P)

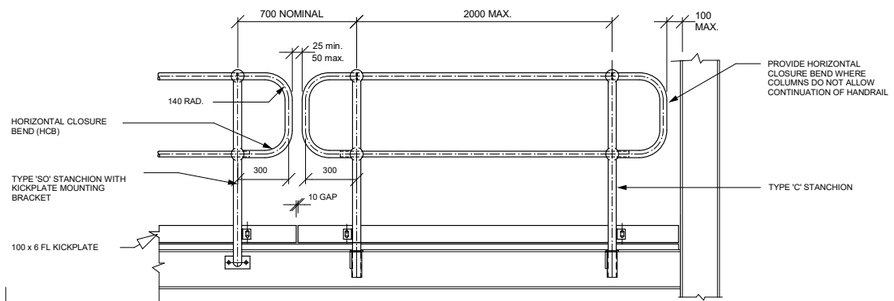

TYPICAL REMOVABLE PANEL

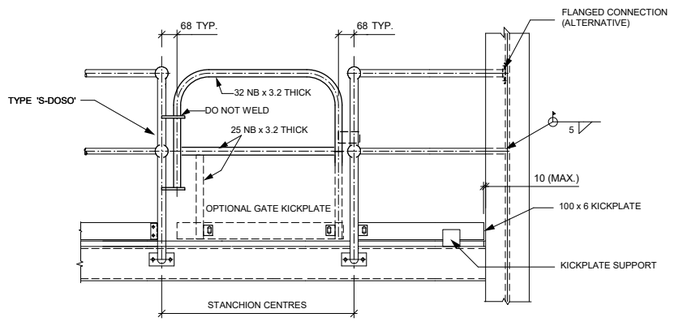

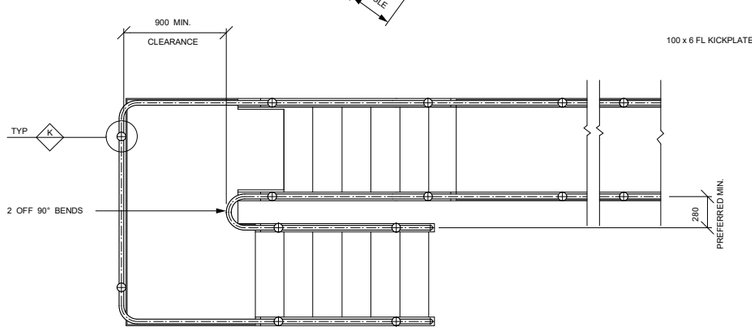

TYPICAL STAIR & PLATFORM HANDRAIL DETAILS

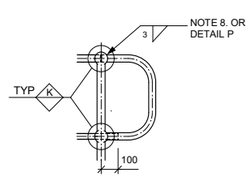

TYPICAL CLOSURE HANDRAIL JOINT (Q)

FOR GENERAL RELEASE

REV	PARTICULARS	BY	DATE
5	H DETAIL BOLT DESCRIPTION CHANGED.	TH	13/05/20
4	DETAIL DESCRIPTION CHANGED.	TH	06/11/18
3	K DETAIL UPDATED.	TH	05/11/18

WEBFORGE

WEBFORGE (WA)
24 TENNANT STREET, WELSHPOOL
WESTERN AUSTRALIA
A.C.N. 009 419 756
Phone (08) 9361 8933 Fax (08) 9361 7057

CLIENT:

JOB: STANDARD HANDRAIL DETAILS

DETAIL: STANCHION WELDING-SITE WORKS

WEBFORGE GRID TYPE		SURFACE TREATMENT	REQ'N No. STD - 101/5
DRAWN TAW	CHK	CUST. O/N.	DRAWING No. STD - 101 / REV. 5
DATE 11/94		JOB No.	

STATIONARY DATE: 27/10/04