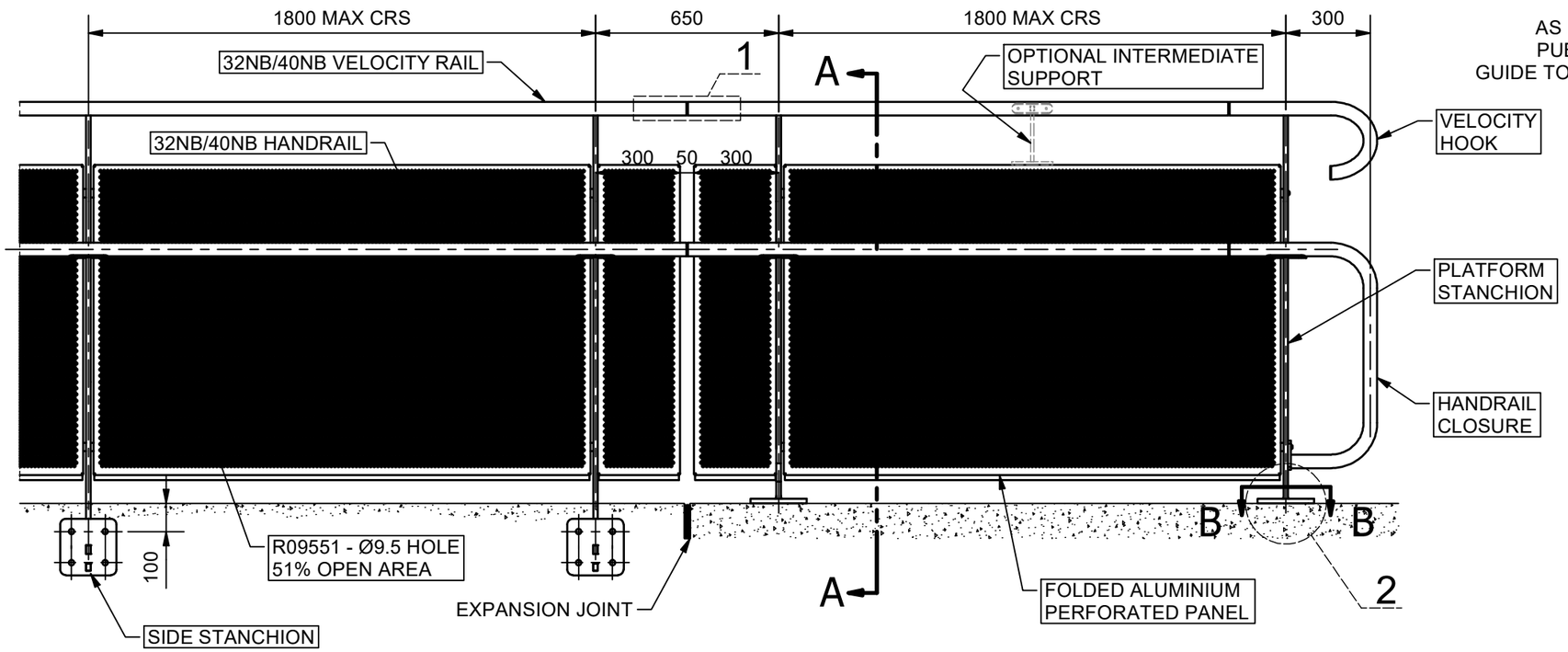

ELEVATION VIEW

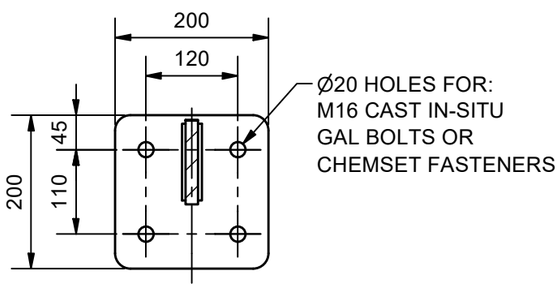

SECTION B-B

TYPICAL BASE PLATE DETAIL
PLATFORM AND SIDE STANCHIONS

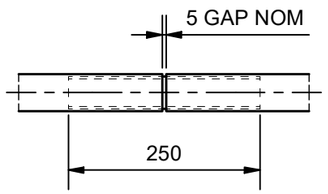

DETAIL 1

TYPICAL SLIP JOINT
FIX ONE SIDE WHEN SPANNING
EXPANSION JOINT

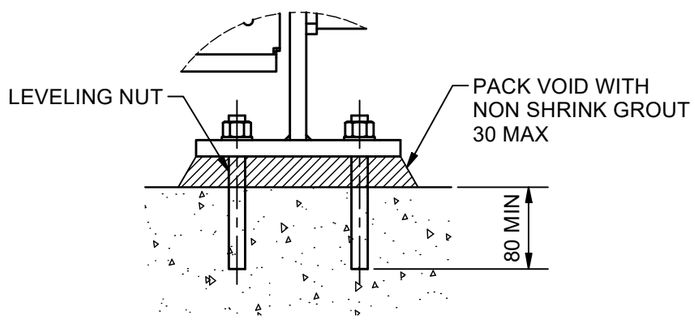

DETAIL 2

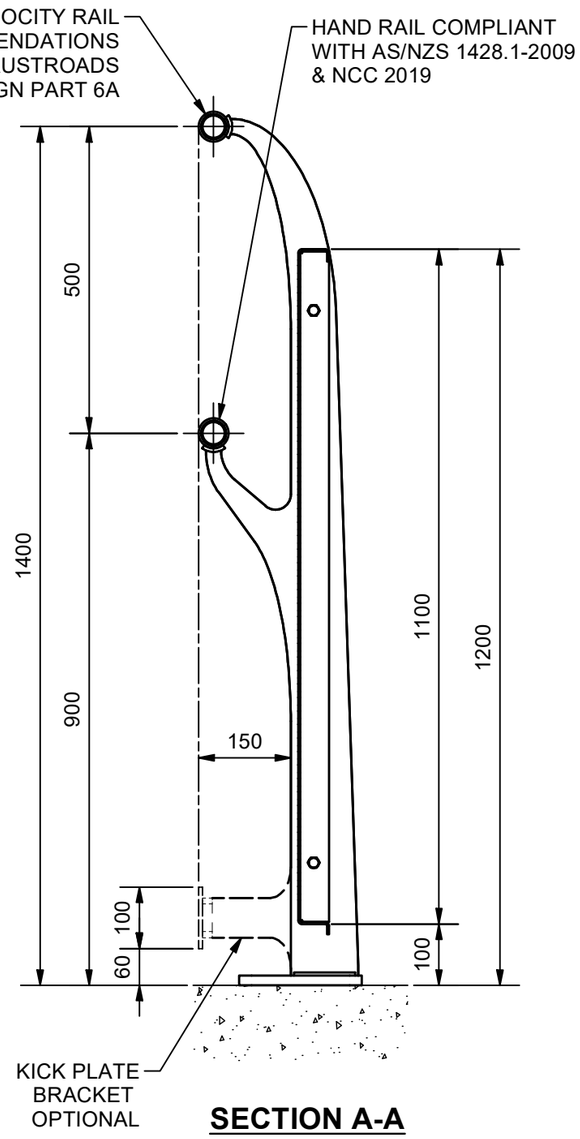

SECTION A-A

NOTES:

1. MONOWILLS LINK AS5100 BARRIER IS DESIGNED TO MEET THE STATIC LOAD & DEFLECTION REQUIREMENTS OF PEDESTRIAN BARRIERS AS/NZS 5100.2-2017 CLAUSE 12.5 & NZTA BRIDGE MANUAL CLAUSE B6.4, WHEN MANUFACTURED IN ACCORDANCE TO WEBFORGE MANUFACTURING PROCEDURE. NZL PS1 AVAILABLE ON REQUEST.
2. WHERE THE AUTHORITY REQUIRES PEDESTRIAN BARRIERS TO RESTRAIN CROWDS OR PEDESTRIANS UNDER PANIC CONDITIONS AND/OR NZTA, THE MONOWILLS LINK AS5100 BARRIER CAN BE ADJUSTED TO MEET HIGHER LOADS UNDER WEBFORGE REVIEW AND INSTRUCTION - REFER OPTIONAL INTERMEDIATE SUPPORT
3. MONOWILLS LINK AS5100 BARRIER IS DESIGNED TO MEET THE DIMENSIONAL AND FUNCTIONAL REQUIREMENTS OF THE FOLLOWING STANDARDS WHEN SPECIFIED:
   a. VELOCITY RAIL - AS PER SHARED PATH RECOMMENDATIONS PUBLISHED IN AUSTROADS - GUIDE TO ROAD DESIGN PART 6A
   b. BALUSTRADE - AS PER DIMENSIONAL REQUIREMENTS FOR ANTI-CLIMB AND FALL FROM HEIGHT PROTECTION IN NCC VOLUME 2
   c. HANDRAIL - AS PER DIMENSIONAL REQUIREMENTS INCLUDING FUNCTIONAL CLEAR HAND ACCESS AS OUTLINED IN AS/NZS 1428.1-2009
4. MONOWILLS LINK AS5100 BARRIER IS SUPPLIED IN HDG MILD STEEL. VELOCITY PIPE, HANDRAIL PIPE & KICKPLATE CAN BE UPGRADED TO STAINLESS STEEL ON REQUEST.
5. CUSTOMER TO NOMINATE PREFERRED FOOTING / FIXING (PLATFORM MOUNT / SIDE MOUNT)
6. PROTECTION TREATMENT AND PAINT SYSTEMS TO BE IN ACCORDANCE WITH CLIENT REQUIREMENTS

DRAWING DISCLAIMER:
WEBFORGE PROVIDES THE INFORMATION CONTAINED IN THIS DRAWING AS A GUIDE FOR YOUR INFORMATION ONLY. WEBFORGE HAS TAKEN REASONABLE CARE TO ENSURE THE ACCURACY OF THE INFORMATION AT THE TIME OF PRODUCTION. WEBFORGE EXPRESSLY DISCLAIMS ALL LIABILITY WHATSOEVER FOR (INCLUDING ANY DIRECT OR INDIRECT LOSS OR DAMAGE, COSTS OR EXPENSES HOWSOEVER INCURRED BY ANY PERSON) RELIANCE ON THE WHOLE OR ANY PART OF THE INFORMATION CONTAINED IN OR OMITTED FROM THIS DRAWING. WEBFORGE RESERVES THE RIGHT TO MAKE TECHNICAL CHANGES WITHOUT NOTICE.

REV	DESCRIPTION	DATE	DRAWN
2	ENTIRE DRAWING REVISED	14/09/22	AJM
1	NOTE 1 REVISED	17/06/21	AJM
0	ISSUED FOR PUBLICATION	25/11/20	AJM

PROJECTION
DO NOT SCALE
ALL DIMENSIONS IN mm U.N.O.

DRAWN	LBA
DRAWN DATE	02OCT20
APPROVED	MT
APPROVED DATE	02OCT20

WEBFORGE LOCKER
A valmont COMPANY

CLIENT
WEBFORGE LOCKER
PRODUCT
AS5100 PEDESTRIAN BARRIER
VELOCITY HAND RAIL (PERF INFILL)
ASSEMBLY

DRAWING NUMBER	SHEET	REV
BRVL-EX-004	1 OF 1	2

C:\Vault\Projects\Standard Drawings\AS5100 Pedestrian Barrier\Drawings\BRVL-EX-004.dwg